11/3/2010

EINDHOVEN UNIVERSITY OF TECHNOLOGY

STICKMAN MANUAL

Koolmees, H.B. 0660668
Moris, B. 0657321
Thevissen, T.A.J. 0652637

Supervisors: Dr. Ir. Kostić, D.
Ir. Zutven, P.W.M.
Coach: Matthijssen, I.A.J. BSc.

Table of Contents

Introduction

This manual describes the steps for both *passive* and *actuated* walking of the *Stickman*. If the cursive printed words are not clear see the terminology section of this manual for a short explanation of these words. However basically it is expected that the knowledge of the reader about this subject is sufficient enough that he or she understands these words. If this is not the case, it may be wise to first read the corresponding report about the *Stickman*.

First, in Chapter 1, the set-up for passive and actuated walking will be described. Then, in Chapter 2, there will be shown how to build a controller in *Simulink* in Linux. In Chapter 3 both passive walking and actuated walking will be discussed. In Chapter 4 possible errors will be discussed and as said before in Chapter 5 some terminology is explained.

1. Set-up

In this chapter first the set-up of the passive walking is discussed. The set-up of the actuated walking, which is an elaborated version of the passive walking set-up, will be discussed next. All necessary components will be summed and there will be shown how to connect all components to each other.

1.1. Passive walking

In order to walk passively you will need to prepare both the stickman and the walking surface. If you do not want measure the angle between the legs you can skip the part 'connecting encoder'.

1.1.1. Components required

You will need the following components for passive walking:

- Stickman
- Tables with a total length of 3 meters
- Material for raising the table
- The two wooden plates with blocks attached
- Clamps and/or weights

And if you would like to measure the angle between the legs you will need the following additional components:

- Converter (to convert the encoder signal)
- Amplifier which feeds the converter 10-35 DC Volts
- A TUe/DACs
- Laptop
- Cables for connecting
- USB stick (optional)

1.1.2. Preparing the Stickman

First the Stickman needs to be prepared for passive walking. Follow the next steps to do so:

1) Disconnect the motor and motor encoder cable from the Stickman. The encoder on the motor axle cannot be used for measuring the angle between the legs because the motor will be disconnected from the main axle. Remove the cables.

2) If you would like to walk without measuring the encoder signal you should tape the cables of the absolute encoder on the main axle somewhere on the Stickman where they do not hamper (we have taped them under the upper weights above the main axle). If you would like to measure the encoder signal you can leave the absolute encoder cable for now.

3) Remove the belt between the motor axle and main axle. This can be done by first unbolting the motor (4 screws), then removing the belt on the motor axle. Note that an additional mass is taped under the motor bridge. Remove this weight in order to unbolt the motor. You do not have to remove the belt from the main axle. Make sure to bolt the motor back in place and reattach the additional mass under the motor bridge because else the weight distribution will be wrong.

4) Make sure the weight distribution of the Stickman is okay. The whole Stickman should be $6\ kg$ and the center of mass should be $10\ cm$ under the main axle. If the Stickman is in original state it will be sufficient to check whether the additional masses on the outer legs are placed on the correct place (the center of these weights should be 10 cm under the main axle). For measuring the center of gravity of the legs separately you can read chapter 1 of the corresponding report.

5) For walking passively no grip tape should be under the foot of the Stickman because the walking gait is badly affected by this. So remove the grip tape.

The Stickman is now ready for passive walking.

1.1.3. Preparing the walking surface

The walking surface is prepared as followed:

1) Place the wooden plates on the tables (with the blocks on the top side). Make sure the plates are in the right order.

2) Check whether the plates are not crooked. If this is the case, solve this by putting weights on the sides of the plates or clamping the plates on the table. When putting weights on, make sure these do not interfere with the Stickman when walking.

3) Adjust the table height on one side so that the desired slope-angle is obtained. For calculating the height raise on one side simple goniometry is used, see formula (1.1).

$$height = \sin\alpha \cdot length\ of\ the\ table \tag{1.1}$$

Here α is the slope-angle. If using multiple tables (as in our case) make sure there is a good transition between the tables.

4) If necessary, reposition the walking blocks. Tape them to the wooden plate, so they can be removed if necessary. The distance between the first four sets of blocks should be $8\ cm$, after this the distance between two blocks should be $6\ cm$ (this was according to us the best set-up).

The walking surface is now prepared.

1.1.4. Connecting absolute encoder

For both passive and active walking the absolute encoder can be used. To connect the absolute encoder to the laptop the first two steps should be followed. For passive walking it is not necessary to use Simulink and make an entire control scheme. The angle between the legs can be read by using Quadscope. The procedure for starting QADScope is described in step 3 to 5.

1) Connect the encoder cable to the converter, the converter to an analog input of the TUe DACs and the TUe DACs to the laptop by the USB-cable. Use the amplifier to give the converter the desired Voltage (10-35 Volts).

2) If the parameters of the converter are not set to the right value, set the parameters to the right values. This should be done as described in the following document:

http://www.tsb-bescom.nl/data/diegon/manualNL/HL_AP21NL_2010V01.pdf

The following values should be set right:

- Multiplicator nomerator = 1
- Multiplikator denomenator = 1864
- Number of SSI clockimpulses = 26
- Number of SSI databits = 26
- Selection DA uitgang = 1 (voltage)
- Umin DA = -10, Umax DA = 10
- S-Umin DA = 0, S-Umax DA = 360

These settings give an output of -10 to 10 Volts depending on the angle (0 to 360 degrees).

The signal of the absolute encoder can now be read via the computer. If it is desired to only read the signal of the absolute encoder (passive walking) this can be done by using QADScope. The procedure for starting QADScope is as follows:

3) Insert the Linux DVD or USB stick in the computer, and then start the computer. Press F9 while the startup screen shows. Then choose the option '*startup from portable device*'.

4) Pres enter when asked during the startup of Linux. (One time in the beginning of the startup and one time in the end)

5) Wait for Linux to start up completely, then start QADScope by clicking once on the QADScope icon or start Matlab and type '*qs_usb'* in the Matlab prompt box.

QADScope can now be used for reading the data of the absolute encoder.

1.2. Actuated walking

In order to walk active you will need to prepare both the stickman and the walking surface. The preparation of the walking surface is exactly the same as with the passive walking, see section 1.1.3 for this. However the Stickman should be prepared different and additional preparations should be made which will be described here.

1.2.1. Components required

You will need the following components for actuated walking:

- Stickman
- Tables with a total length of 3 meters
- Material for raising the table
- The two wooden plates with blocks attached
- Clamps and/or weights
- Amplifier with an output of $3.2A$ over $24V$
- Amplifier with an output of $10 - 35V$
- Converter
- 1x TU/e DACs
- Laptop with Linux and Simulink
- USB stick (optional)
- Cables for connecting

1.2.2. Preparing and connecting the stickman

Follow the next steps in order to set up the stickman for active walking:

1) Make sure the walking surface is prepared. If this is not done, follow instructions of Chapter 1.1.3.

2) Make sure the belt connects the motor axle and main axle. If the belt is not in place it can be put in place by first unbolting the motor (4 screws), then placing the belt between the motor axle and main axle. Note that an additional mass is taped under the motor bridge. Remove this weight in order to unbolt the motor. Make sure the tension in the belt is not too much when bolting the motor back in place. Also make sure to reattach the additional mass under the motor bridge because else the weight distribution will be wrong.

3) Make sure the weight distribution of the Stickman is okay. The whole Stickman should be around $6\ kg$ and the center of mass should be $10\ cm$ under the main axle. If the Stickman is original state it will be sufficient to check whether the additional masses on the outer legs are placed on the correct place (the center of these weights should be 10 cm under the main axle).

4) For actuated walking grip tape should be taped under the foot of the Stickman. Or else the Stickman will not have enough grip for walking.

5) Connect the Stickman to the TUe/DACs and the TUe/DACs to the laptop. This should be done as seen in Figure 1.1. If connected right there should go three wires from the TUe/DACs to the Stickman. One via the amplifier (in our case 3 amplifiers of $1.3A$ because these were available) to the motor of the Stickman. Make sure that the blue wire is connected to the + side of the motor and the white wire is connected to the – side of the motor. Else the signal of the motor-encoder will be in

opposite direction which will cause an unstable behavior. The second cable is directly from the TUe/DACs to the motor-encoder. The third cable is from the TUe/DACs via the converter to the main axle absolute encoder. The TUe/DACs is connected to the computer via USB.

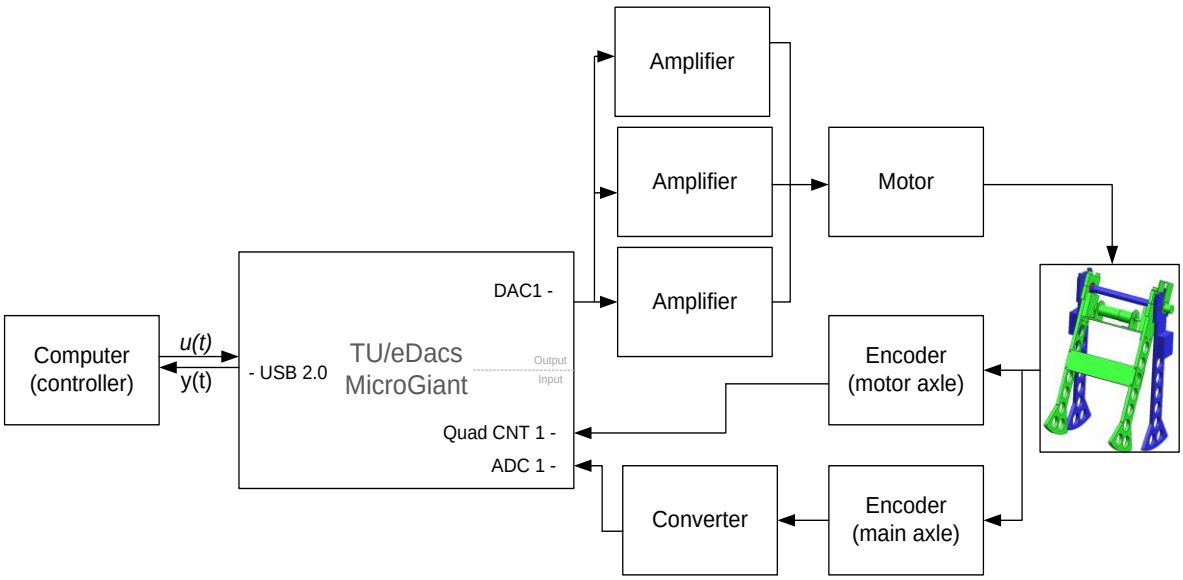

Figure 1.1. *Connection scheme of the Stickman*

6) Tape cables so they are easy guidable and not interfere with the legs if the Stickman is walking.

7) Connect the converter properly and set right values (see section 1.1.4)

The Stickman is now ready for active walking.

2. Building a controller

In this section it is described how Simulink in Linux is started and how the controller is built in Simulink.

2.1. Starting Linux and Simulink

For starting Simulink, first Linux needs to be started. Linux is used because this operating system has a lot less background processes, this allows more accurate processing of data.

1) First insert the DVD or USB stick in the computer, and then start the computer. Press F9 while the startup screen shows. Then choose the option '*startup from portable device*'.

2) Pres enter when asked during the startup of Linux. (One time in the beginning of the startup and one time in the end)

3) Wait for Linux to start up completely, then start Matlab by clicking once on the Matlab icon.

4) If Matlab is fully started, type '*Simulink'* in the Matlab command box. Simulink will now be opened.

2.2. Creating a block scheme

For actuated walking without the absolute encoder you will need to create two Simulink programs. First a controller needs to be made, and second a Simulink program needs to be made which puts the Stickman back into the initial position, which will be named center.

2.2.1. Controller

Start tdblocklib in Matlab (by typing 'tdblocklib' in the Matlab command box), this because the drivers for the TU/e DACS settings are right in this scheme. Save the scheme under another name, by example 'Stickman_controller'. Then create a control scheme as seen in figure 2.1. The plant is the tdblocklib block which represents the connection between the TU/e DACS and the computer. A saturation (sat block) should always be placed in front of the plant, to prevent sending a to large voltage to the plant. The value of the saturation depends on the used amplifier(s). The motor can handle a maximum of $3.2A$. The maximum output of the amplifiers is achieved if $2.5V$ is send to the TU/e DACS. In our case the three parallel amplifiers of $1.3A$ could generate $3.9A$. So to prevent the motor from overheating a saturation of $\pm 2V$ should be placed in front of the plant. This makes sure that the motor only gets $3{,}12A$ if $2V$ is sent from the controller to the TU/e DACS.

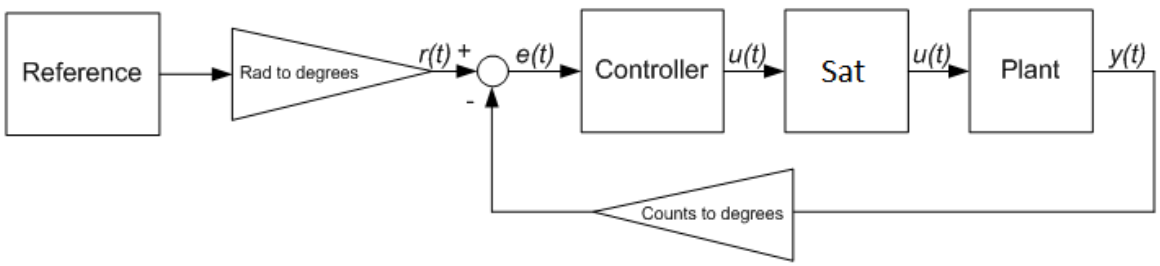

Figure 2.1. *Control scheme of the Stickman*

The controller can be designed as desired. See the corresponding report for the designing process used by us. If it is desired to build a simple and robust controller fast, a PD controller with a P-gain of $\frac{2.0}{20}$ and a D-gain of $\frac{2.0}{100}$ is a good option.

For the reference signal every possible signal can be chosen. In order to follow the walking gait of passive walking the following function can be used as reference signal:

$$0.6545 \cdot \sin(6.667t + 1.580) + 0.005245 \cdot \sin(19.73t + 1.517) + 0.004499 \cdot \sin(32.62t + 1.885)$$

This reference function is determined based on Matlab simulations. It would be preferred to create a reference signal which is determined based on real passive walking simulations.

Note that while building the controller it should be kept in mind which signal is dealt with. By example the plant gives the angle in counts. The number of counts needs to be converted into a unit which can be compared to the reference signal.

2.2.2. Center

In order to center the stickman after walking a different control scheme should be made. We have used an open loop control scheme where a constant voltage is send to the Stickman which puts it back into the original position. This technique was completely manual, i.e. the direction of the movement was set manually dependent on the leg position and when the leg was back in initial position the program was stopped manually. This is not very user friendly, but it was sufficient for us. For demonstrations a better technique should be developed.

3. Walking

Here passive and actuated walking will be discussed. If you have set up all components and, in case of active walking, made a suitable controller please proceed. Otherwise go back to either section 'Set-up' or 'Building a controller'.

3.1. Passive walking

Before passive walking, make sure the Stickman and the walking surface are prepared as described in Chapter 1. At least two persons are needed for passive walking! One for initiating the walking and one for making sure the Stickman will not fall. *There are fragile (expensive) parts on the Stickman so make sure there is dealt with caution!* Follow the next advice for best initiating:

1) Make sure the cables are out of the way.

2) Put the inner legs on the first set of blocks, put your hands on the top of the outer legs (this way you can swing the outer legs the best and push the stickman at the same time).

3) Make sure someone is ready for catching the Stickman.

4) Make sure the Stickman is straight towards the walking surface (this can be checked by swinging the inner legs and checking whether they are placed on the second set of blocks correctly.

5) Initiate the walking by pushing and swinging the outer legs simultaneously. (This is rather difficult and acquires some practicing)

6) Make sure the Stickman does not fall.

If you would like to measure the angle between the legs then you should connect the encoder to the laptop as described in 1.1.4. Use QADScope for reading and processing the angle between the legs.

3.2. Actuated walking

For actuated walking first make sure the Stickman and the walking surface are prepared and the Stickman is connected to the laptop as described in Chapter 1. Then make sure a decent control scheme is built in Simulink as described in Chapter 2. At least three persons are needed for passive walking! One for initiating the walking (see 3.1), one for making sure the Stickman will not fall and one to operate the computer and TU/e DACS. *There are fragile (expensive) parts on the Stickman so make sure there is dealt with caution!*

3.2.1. Walking

1) First make sure everything is connected right, the computer is started and a control scheme is built as described in Chapter 2. Also make sure the Stickman and everyone is in position.

2) Save your file (not necessary, but recommendable), build (shortcut 'control'+ 'b')

3) Start Console, enter '*./ (the name of the Simulink file) –w*' in console

4) Connect to target in Simulink

5) Now make sure everyone is in position and then press '*start real time sim*'. The Stickman will now begin to move. The person which is responsible for initiating the walking should initiate the walking

as described in 3.1. If the Stickman falls the other person should catch it. If the Stickman is fallen or something goes wrong it can be stopped by either stopping the simulation in Simulink or by shutting down the amplifiers.

6) If the stickman is fallen or it has completed the walk the simulation can be stopped by pushing '*stop real time simulation*'.

3.2.2. Processing results

Data can be recorded by the function 'output' in Simulink, this function writes the desired values into an output file, this file is saved under the name of the simulink file.mat in the root directory. This file can be copied onto an USB-stick where the values can be further processed (graphs e.d.). Make sure the file is copied before another simulation is started because else the file will be overwritten. Before you can save data to an USB-stick, connect the USB-stick to the laptop. Mount it by clicking the icon with the right mouse button and selecting "mount". Make the USB-drive writable, by right-clicking the same icon and choosing "Change read/write mode" and choosing "Yes". The USB-drive is now attached to the directory "/mnt/sda1". Before ejecting, make sure to unmount the usb-drive.

4. Errors

With experimenting errors nearly always will show up. A description and possible solution will be given here of the errors which occurred while we were experimenting.

4.1. Passive walking

4.1.1. Walking behavior

If the stickman is not walking properly make sure the following are true:

- There is no grip tape under the foots, because grip tape will negatively influence the walking behavior.
- The walking surface is not crooked, this can be solved by using weights and clamps to straighten the surface.
- Make sure the distance between the blocks is sufficient, in our case the optimum value was 8 cm for the first 4 steps and then 6 cm for the rest.
- Make sure the slope angle is sufficient, see section 4.2.2. for adjusting.

4.1.2. Slope angle adjustment

- If the Stickman falls to the front, make the slope angle smaller
- If the Stickman falls to the back, make the slope angle larger

4.2. Actuated walking

4.2.1. Walking behavior

If the stickman is not walking properly make sure the following are true:

- There is grip tape under the foots, without grip tape it has not enough grip for active walking.
- The walking surface is not crooked, this can be solved by using weights and clamps to straighten the surface.
- Make sure the distance between the blocks is sufficient, in our case the optimum value was 8 cm for the first 4 steps and then 6 cm for the rest.

4.2.2. Killing a process

When Matlab or another process does not respond you can do the following to kill this process:

1) Open a newe command prompt in Knoppix.
2) Type “su” (superuser) to get the sufficient rights.
3) Type “ps-aux” or “pl –e” (get a list of all processes and ID).
4) Find the ID of the process you want to kill.
5) Type “kill -9 <process id>”.

4.2.3. Motor connecting

If the controller controls such that the legs move in the opposite direction of what is expected such that the behavior of the Stickman becomes instable then the motor is wrongly connected. Make sure the white cable is connected to the + side of the motor and the blue cable to the – side of the motor.

4.2.4. Slack in transmission

If the slack in the transmission will become to large, this is most probably by a bent motor axle. It is possible to decrease slack by turning the motor axle half round or straightening it. This is done by the following procedure:

1) Unscrew motor (if necessary remove additional mass under motor bridge to gain access to screw).
2) Disconnect transmission belt on motor axle
3) Turn motor half round or straighten the motor axle.
4) Reconnect transmission belt (so under 180 deg angle).
5) Screw motor back in place (and put the additional mass back).

5. Terminology

Some words could be unclear to the reader, therefore a short explanation of these words is given.

Word	Explanation
Stickman	A two-legged walking robot with only one degree of freedom (the angle between the two legs).
Passive walking	The walking of the Stickman on a small slope without using actuation. The gravity force is used for overcoming friction.
Actuated walking	The walking of the Stickman by using a motor and a controller.
Simulink	Functionality in Matlab which will be used for creating a controller.
QADScope	Program for scoping incoming signals
Linux	In this case, the TUeDAX Knoppix DVD is used. For working faster, it is possible to put it on a USB-flsh drive.