Concept design of a humanoid robot's upper body

G.J.T.J. Verstralen

CST 2011.095

Traineeship report

Coach(es): dr.ir. P.C.J.N. Rosielle

Supervisor: prof.dr.ir. M. Steinbuch

Eindhoven University of Technology
Department of Mechanical Engineering
Control Systems Technology

Eindhoven, December, 2011

Contents

1 Introduction

A humanoid robot is designed to have the appearance of a human body. Generally it consist of two legs, two arms, a torso and a head. A humanoid robot should be capable of adapting to and surviving in an ever changing environment. Mobility of humanoid robots is achieved by mimicking human walking, this is one of the main obstacle to be overcome before the introduction of humanoid robots into our everyday lives.

Team Eindroid of the Eindhoven University of Technology is active in the field of humanoid robotics currently they use the TUlip robot figure 1.1 as there test bed for humanoid walking, however due to shortcomings in the design of TUlip plans are to replace it with a more capable robot.

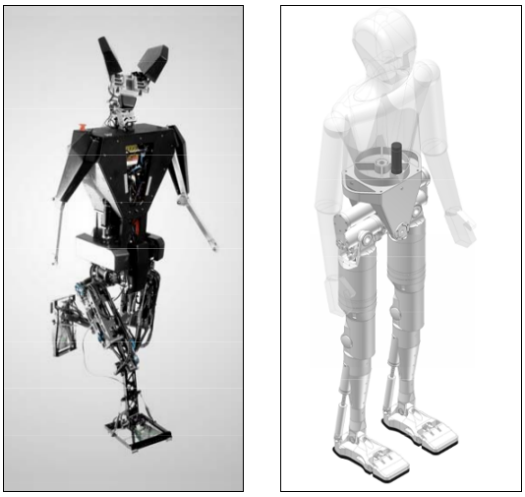

Figure 1.1: TUlip robot of team Eindroid (left), Lower body for the new robot (right)

This report continues on the work of Maarten Dekker who designed the lower body for a new humanoid robot[2] for team Eindroid. Figure 1.1 shows the design of the lower body. The new robot is designed as a full anthropomorphic humanoid robot.

The goal of this report is to give a concept design for the upper body of the new humanoid robot. As the most complicated mechanical part, the arm and the drivers for it are elaborated. Chapter 2 discusses the arm in general and will give a overview of the design. The chapter 3 through 5 will discuss the

design of the shoulder, upper arm , and lower arm. Chapter 6 will briefly discuss the torso and Chapter 7 will contain the conclusion and will give some recommendations.

2 Overview of a humanoid arm

A human arm consists of three joints and 7 degrees of freedom (DOFs), three in the shoulder, one in the elbow and three DOFs in the wrist, Figure 2.1 shows a diagram of such a 7 DOF humanoid arm. In order for the new robot to be an anthropomorphic humanoid these DOFs need to be present.

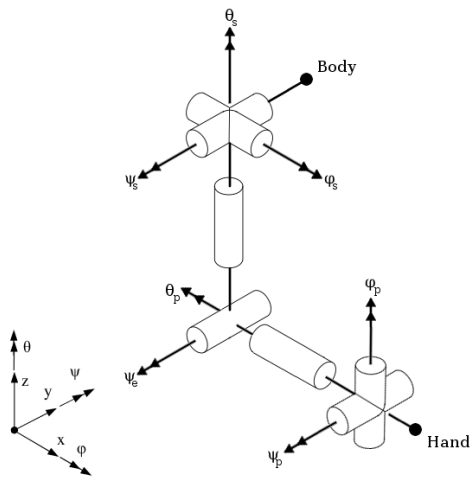

Figure 2.1: Kinematic diagram of a human arm with 7 degrees of freedom

Since the robot's primary function is as a test bed for humanoid walking the main function of the arm will be the stabilization of the robot during walking, additional functions are manipulation of it's environment through the use of its hands. The arms should provide a stiff link between the torso and hands and should be able to freely position the hands and support the weight of the hands and the load they are carrying.

2.1 Kinematic redundancy

Since a point in space can be represented by six coordinates, the use of 7 DOFs introduces a redundancy in the kinematics which enables the hand to assume a position relative to the torso in more than one configuration. This is an advantage as it enables the robot to assume postures which minimize the joint torques.

2.2 Arm Dimensions and Masses

Since the new robot is supposed to be human like, the dimensions of the arm should correspond to a scaled down version of a real human with a total height of 1.8 m. Appendix A contains an overview of the dimensions and masses of a human body. By scaling these dimensions to the size of the new robot ($L = 1.5$ m) the dimensions of the segments can be obtained. Table 1 show the dimensions and masses of a human arm. Total weight of the new robot is 45 kg (scaled down from 80 kg).

Segment	length fraction [-]	size [mm]	mass fraction [%]	mass [kg]
Upper Arm	0.186	279	3	1.35
Lower Arm	0.146	219	2	0.90
Hand	0.108	162	1	0.45

Table 1: Dimensions and masses of a human arm

By adhering to these values for the design of the robot it's kinematics and dynamics will closely follow that of a typical human which results in more human like motions.

2.3 Range of Motion

The *Range of Motion* (ROM) of the different joints of a human arm are displayed in Table 2 as can be seen the ROM of the robot resembles that of a human.

Joints:		Robot	Human
		Range [°]	Range [°]
Shoulder	ϕ	180	170
	ψ	210	230
	θ	180	180
Elbow	ψ	135	155
Wrist	ϕ	-	70
	ψ	-	110
	θ	180	180

Table 2: Range of Motion of a human and the new robot's arm

2.4 Velocities, accelerations and torques

The goal of the robot is to achieve human like movement, thus accelerations and joint velocities comparable to those of a human need to be achieved. To achieve the desired accelerations and velocities it is important for the body segments to be light weight and have actuators capable of high torque. The key to reducing the mass of the limbs is locating the actuation of a joint one link up in the kinematic chain, for instance placing the actuation of the shoulder in the torso.

To achieve enough torque compact transmissions need to be incorporated close to the joint. Table 3 contains the maximum torques needed in the joints to keep the arm steady, the arm is designed with the goal of achieving this joint torque within the nominal torque range of the actuation so that peak torque can be used for accelerations.

Joint	Torque [Nm]
Shoulder ψ	7.8
Shoulder ϕ	7.8
Arm θ	2.3
Elbow ψ	2.3
Wrist θ	0.4

Table 3: Static joint torques

2.5 Motors

In keeping with the choice of motors for the lower body the upper body uses Maxon DC motors from the same RE-range. The key advantages of these motors are their simple drive electronics and their relatively high stall torque. Furthermore since team Eindroid uses these same motors in their current humanoid robot TUlip, they already have experience with these motors.

Joint	RE	no.	Power	mass [kg]	nominal. torque [mNm]	stall torque [mNm]	max. velocity [rpm]
Shoulder ψ	35	323890	90	0.340	91	1160	12000
Shoulder ϕ, θ, arm ψ	30	310007	60	0.238	85	1020	12000
Wrist θ	25	339152	20	0.115	30.4	316	14000

Table 4: Motor specifications

2.6 Overview of the design

Figure 2.2 shows an overview of the design of the arm. The design shown is a concept design and is not finalized for fabrication. The design consists of a shoulder joint which rotates the upper arm in ϕ_s and ψ_s. A joint in the upper arm which rotates the elbow and lower arm around θ_s, An elbow which rotates the lower arm around ψ_e and a joint in the lower arm which rotates the wrist and hand around θ_p.

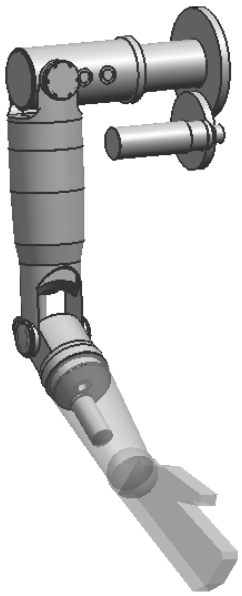

Figure 2.2: Overview of the design for the arm

The torso contains the actuation for both ϕ_s and ψ_s. The actuation of ϕ_s consist of a bevel gear pair followed by a gear train and the actuation of ψ_s consists of a single stage planetary gearbox followed by a gear train. The elbow is actuated by a direct ball screw drive and the the remaining two DOFs in the upper and lower arm are driven by hypocyclic gearboxes. The following chapters will discuss the individual joints in more detail.

3 Shoulder

3.1 Design overview

The shoulder is depicted in figure 3.1. The shoulder joint rigidly connects the upper arm to the robot's torso and contains the following joints and actuations: shoulder ψ and shoulder ϕ.

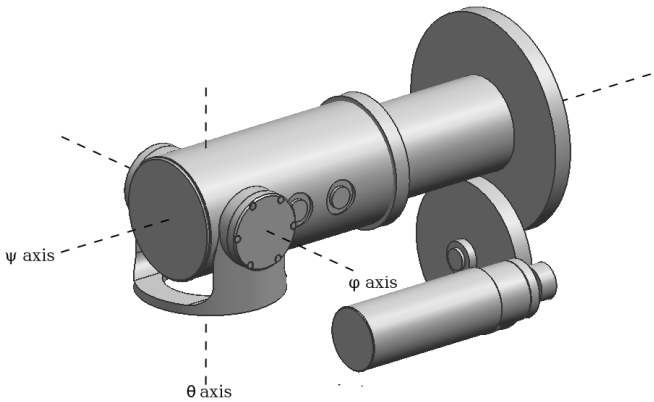

Figure 3.1: Shoulder joint, isometric view

Human shoulder joint

The human shoulder joint can be seen as a ball joint and can rotate the upper arm in three DOFs, furthermore it has a high amount of mobility (see table 2). The design of the shoulder joint of the robot imitates this joint by simplifying this ball joint to three revolute joints with intersecting axes. This greatly reduces the complexity of the design of the joint and its actuation and allows placing the θ joint in the upper arm.

Chapter outline

Section 3.2 of this chapter contains a description of the design of the shoulder ψ DOF, section 3.3 contain a description of the design of shoulder ϕ joint and some general remarks about the shoulder design are given in section 3.4.

3.2 Shoulder ψ

In order for the design to accurately function as a ball joint it is important that the axes of the ψ and ϕ joint intersect, if they do not, parasitic movements of the upper arm may occur when actuating one of these joints. The intersection of the two axes is achieved by placing the actuation of the ϕ joint inside a tube which doubles in function as the axis of the ψ DOF. An added benefit of this configuration is that the inertia of the components of the ϕ joint is low because of their close proximity to the ψ axis.

Joint design

Figure 3.2 shows the design of the shoulder ψ joint. It consists of a motor-tube (1) containing the motor driving the ϕ joint. A single row deep groove ball bearing (INA FAG 61804-2RSR) (2) connects the tube to the torso (3) via a gear flange (4) where it is held in place by a retaining nut (5). The motor tube is connected rigidly to a second tube containing the ϕ-actuation (6). A second single row deep groove ball bearing (INA FAG 61811-2RSR) (7) connects these two tubes once more to the torso.

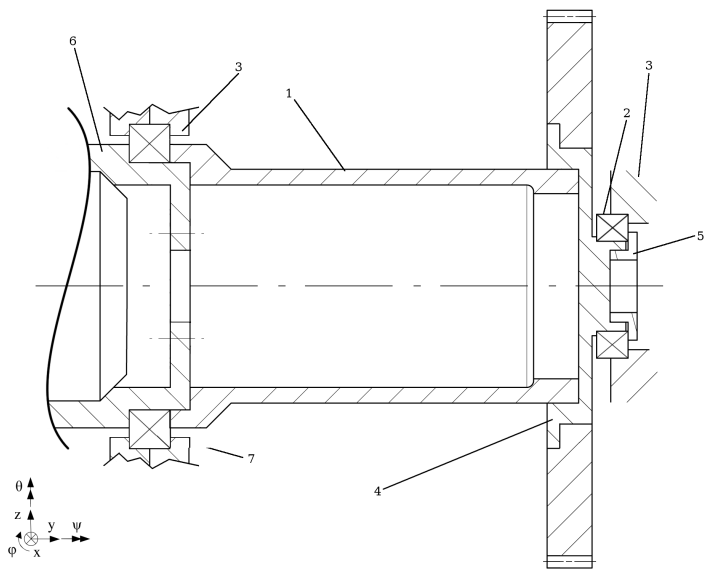

Figure 3.2: Front view of the ψ joint construction: motor-tube (1), deep groove ball bearing (2), torso (3), gear flange (4), retaining ring (5), actuation-tube (6), deep groove ball bearing (7).

Joint actuation

This section describes the actuation of the shoulder joint in ψ. The transmission consist of a single stage planetary gearbox and a gear train to achieve the desired transmission ratio, different concepts for the actuation of the ψ DOF have been considered. these concepts can be found in Appendix C

Figure 3.3 shows the actuation of the ψ joint, it consists of a 90 Watt motor (1) (Maxon RE30) connected to a planetary gearbox (Maxon GP 32 A) (2). The output shaft of the gearbox drives a pinion (3) with modulus m=1 and number of teeth z=20. The pinion meshes with an intermediate gear (4), z=84 which is connected to a second pinion (5), z=24. The second pinion meshes with a final gear (6), z=120 which connects to the motor-tube via a flange (7), driving the joint. The stub axle containing the two intermediate gears is supported by two single row ball bearings (INA FAG 61800-2RSR) (not depicted) and the gearbox can be connected to a front to back baffle in the torso by means of M3 bolts.

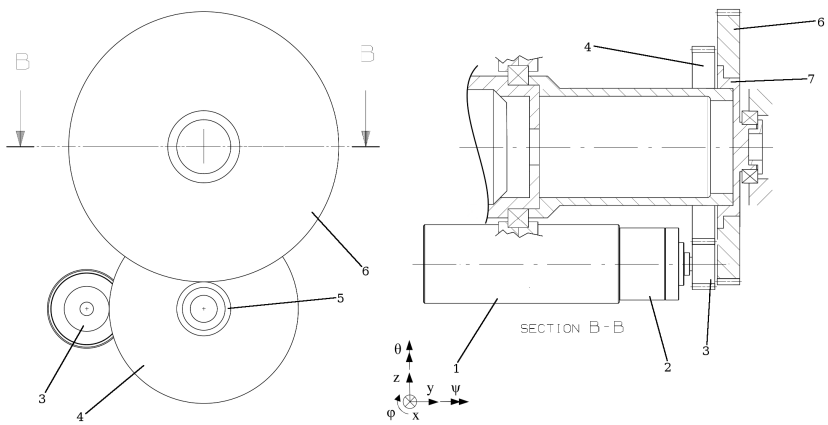

Figure 3.3: Side view of the ψ joint actuation and cross section view: 90 Watt motor (1), planetary gearbox (2), pinion (3), intermediate gear (4), second pinion (5), final gear (6), gear flange (7).

Torques and transmission ratios

The motor has a maximum continuous torque of 91 mNm and a stall torque of 1.2 Nm, the gearbox is a single stage planetary gearbox, it has a reduction of $i = 1/3.7$ and a efficiency of 85% the final two reduction stages reduce the overall efficiency to 80% max. Total transmission ratio is $i = 0.013 \approx 1/77$.

This results in a nominal joint torque of 5.6 Nm and a maximum torque of 71 Nm.

Stresses and tooth loads

Because of the relatively high torques in this design the gears are subjected to significant tooth loads, the Lewis gear strength equation[1] can be used to calculate the maximum permissible tooth load in a gear:

$$W_t = f_w m \cdot \frac{Y \cdot UTS}{3} \tag{3.1}$$

Here W_t is the tooth load in Newtons, f_w is the face width of the gear in millimeters (which is 10 mm for the gears in the ψ actuation), m is the modulus of the gear, Y is the Lewis gear factor[1] and UTS is the ultimate tensile strength of the material in MPa. In order to withstand the tooth loads all gears in the ψ-actuation should be made of steel and at least the second pinion gear (z=24) should be hardened. In order to keep the weight down the larger gears can be realized as ring gears made out of steel connected to a flange made out of a lighter material.

Actuation stiffness

Due to the use of gears in the transmission the actuation is very stiff compared to alternatives as a belt drive. The use of a tube, with high stiffness compared to weight, as the driven shaft adds to the stiffness even more.

Backlash

By pre-loading both of the larger gears in the gear train the only source of backlash is the planetary gearbox. The gearbox has a backlash of $0.7°$ this is reduced by the transmission to $0.033°$ which results in a maximum backlash at the hand of 0.4 mm. By using a more expensive low backlash version of the gearbox which is a drop-in replacement the backlash can be reduced to 0.1 mm at the hand.

3.3 Shoulder ϕ

The ϕ joint and actuation are placed inside the hollow shaft of the ψ actuation. This is done to ensure the intersection of the ψ and ϕ axes. As a result the available space for the actuation of the ϕ joint is limited.

Joint design

Figure 3.4 shows the hollow ψ driveshaft (1) that houses the ϕ actuation. The two protruding tubes are aligned with the ϕ axis of the joint and are used to mount the upper arm. Since this tube is fitted to the motor tube, intersection of the ψ and ϕ axis is insured.

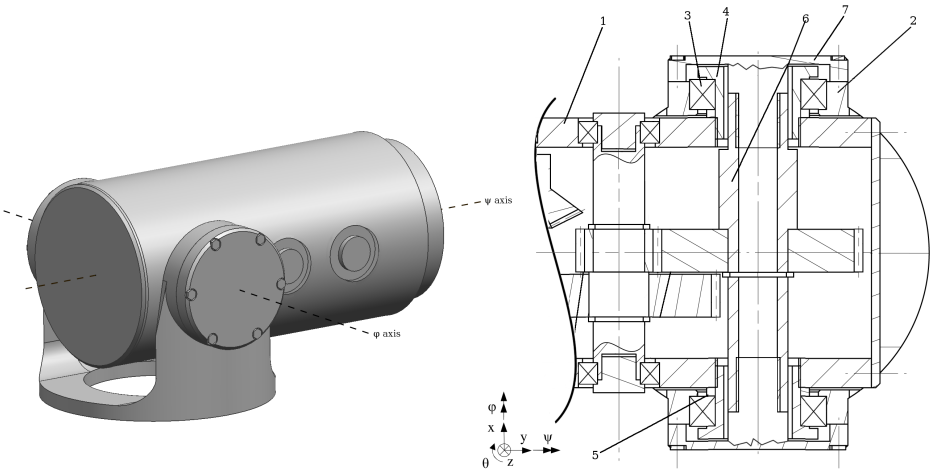

Figure 3.4: Isometric view of the ϕ-tube and cross section view of the joint: ϕ actuation-tube (1), upper arm (2), single row deep groove ball bearings (3), bushes (4), distance ring (5), shaft (6), endcap (7)

As can be seen in the figure, the upper arm (2) is connected to the ϕ actuation tube (1) by two single row deep groove ball bearings (INA FAG 61804-2RSR) (3). Bushes (4) are used to secure the ball bearings. Distance rings (5) are used to facilitate assembly. A shaft (6) is driven by the actuation and transmits the torque through an end cap (7) which is connected rigidly to the upper arm.

Joint actuation

The joint is actuated through the use of a pair of bevel gears and two sets of spur gears. Figure 3.5 shows a section view of the actuation.

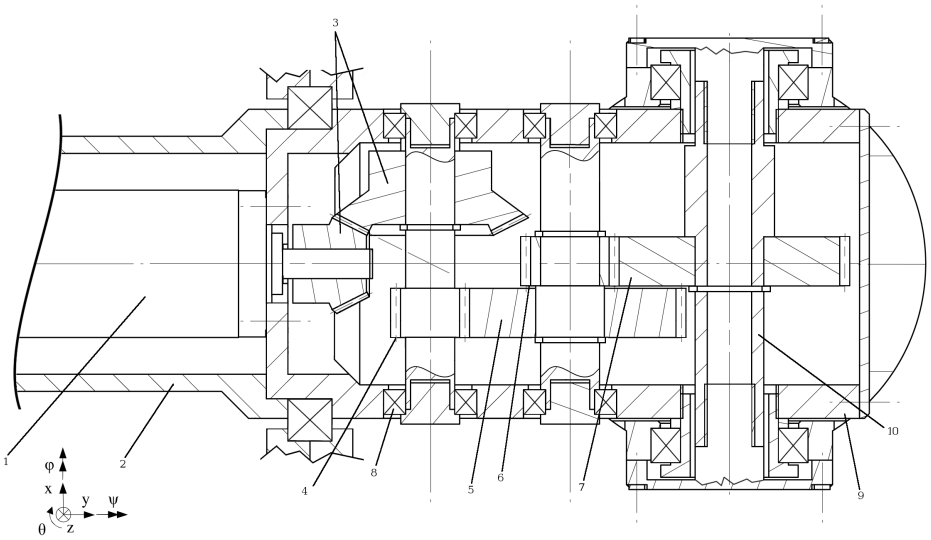

Figure 3.5: Section view of the ϕ-actuation, DC motor (1), ψ shaft (2) , bevel gears (3), pinion gear (4), spur gear (5), pinion gear (6), final gear (7), single row deep groove ball bearings (8), ϕ actuation tube (9), ϕ drive shaft (10).

A 60 Watt DC motor (Maxon RE30) (1) is mounted to the ψ shaft (2) and it's shaft is connected to a a spiral bevel gear, m=0.6 z=22 which forms a set with a second bevel gear, z=44 (MÄDLER: 38536200) (3). This bevel gear drives a shaft which is connected to a pinion, m=0.5 z=24 (4). The pinion drives a spur gear, z=90 (5) connected to a second pinion, m=1 z=18 (6) which meshes with a final gear, z=48 (7). The two intermediate shafts are each supported by a set of single row radial ball bearings (INA FAG 61800-2RSR) (8).

Torques and transmission ratios

The motor is capable of a stall torque of 1 Nm, nominal torque is 85 mNm. Total transmission is $i = 1/20 = 0.05$. Efficiency is estimated at $\eta = 0.98^3 \approx 94\%$ This results in a nominal output torque of 1.6 Nm and a maximum torque of 19 Nm, while low in comparison to the torque available in the ψ direction it is expected that demanded torque will by much lower in this DOF.

Tooth loads and stresses

In order to withstand the tooth loads the gears should be made from steel. The bevel gears have spiral teeth and are capable of withstanding a torque of 2.2 Nm at the pinion side, more than twice the available motor torque. The axial

force generated by a bevel gear depends on the handedness of the gears and the direction of rotation and is given by the following equation:

$$F_x = \frac{F_t}{cos\beta}(tan\alpha\ cos\delta \pm sin\beta\ cos\delta) \tag{3.2}$$

With pressure angle $\alpha = 17.5$, spiral angle $\beta = 38$ and $1/2$ pitch angle $\delta = 13$, this results in $70\ N$ of thrust on the ball bearings which is well below the maximum allowed[8] axial thrust of $0.5 \cdot C_0 = 920\ N$.

The DC motor contains two radial bearings which fixes the output shaft in x and y, however it is not designed to be able to cope with the significant axial loads generated by the bevel gears. In order to support the motor shaft axially, a bearing ball (Ø= 5 mm) is placed behind the motor shaft as can be seen in figure 3.6. The shaft can support axial press-fit loads up to 1020 N, which is sufficient.

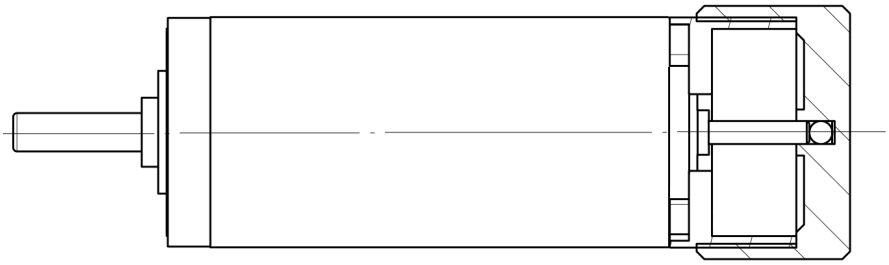

Figure 3.6: Section view of the motor with axial support.

Since the motor's position encoder also needs to be mounted at the rear of the motor the housing of the axial support must be designed to accept such an encoder. If encoders from the maxon MR line are used, the housing of the sensors can be removed which allows mounting them inside the housing of the axial support. Mounting fixtures can be replicated from the encoder housing.

Actuation stiffness

As with the previous actuation, the use of gears results in a stiff transmission in comparison to the alternatives.

Backlash

Because the spur gears can be pre-loaded, the only source of backlash in the actuation are the bevel gears. Backlash at the teeth of the bevel gears is approximately 0.05 mm [1], this results in a backlash of $0.15°$ due to the bevel gear which is reduced to $0.015°$ at the output, this results 0.17 mm maximum backlash at the hand.

3.4 General Remarks

The shoulder joint has an estimated total mass of 1.8 kg. Total mass of the torso is 15 kg[2] so the shoulders will contribute 24% of the available mass, 2.9 kg is used by the lower body[2], this leaves 8.5 kg for the torso and electronics and batteries.

The design uses INA FAG 61800-2RSR bearings in multiple places. These bearings are also used in the lower body (10 per leg) which reduces the amount of unique parts and keeps costs low. INA FAG 61804-2RSR bearings are used both in the ψ and ϕ joint.

All gears in the shoulder joint need to be made from steel to withstand the stresses, both final gears in the joint can be reduced to gear segments to reduce weight. Because the ϕ-actuation has a stroke less than $180°$ both segments can be made from one gear. Since the hip ψ joint uses a gear segment identical to shoulder ψ joint it may be possible to cut gear segments for both actuations from one gear, since these gears are relatively expensive this is a possibility to cut some costs.
Other parts can be made from aluminium which is also the primary material of the lower body.

If due to some accident, such as tipping over, the robot encounters loads significantly higher than it is designed for, it is important that it fails in such a place that it is easily accessible and can be cheaply repaired.
For the ϕ-joint such a place is the connection of the final gear to the shaft which rotates the upper arm. By fixing the gear to the shaft using shear pins rated slightly above the expected maximum dynamical load, the gears and the DC motor will not be damaged.
Easily reachable places to incorporate a failure mechanism are not easily identifiable due to the location of the ψ actuation within the torso. However it is important to protect the gears and gearbox from excessive torques so the actuation has to fail before the final gear, for example at the flange connecting

the final gear to the motor-tube. Building the torso modularly would make maintenance of the shoulder joint easier.

4 Upper arm

4.1 Design overview

The upper arm contains two DOFs, θ-arm and ψ-arm. Figure 4.1 shows the design of the arm with the two axes of the DOFs.

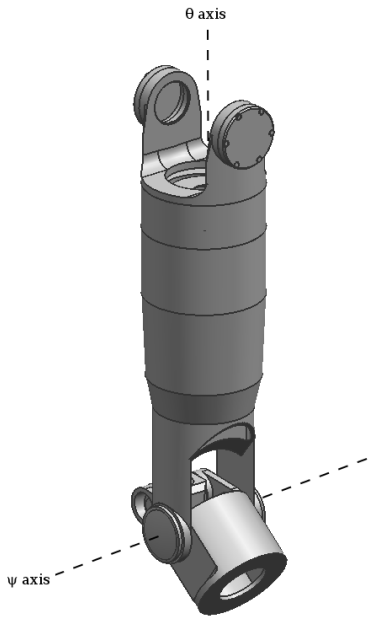

Figure 4.1: Isometric view of the upper arm

The upper arm is connected to the torso through the ϕ-shoulder joint as discussed in the previous chapter. The upper arm rigidly connects the lower arm to the torso through the ψ-arm joint.

Chapter outline

This chapter will first discuss the design of the θ joint and actuation. Section 4.3 will contain a description of the ψ joint and actuation and the chapter will conclude with some general remarks about the design of the upper arm.

4.2 Arm θ

The θ axis should intersect the two axes of the shoulder joint, as a result it lies in the center of the upper arm which can be regarded as a cylinder. The

choice of actuation here is a hypocyclic gearbox which is a type of gearing that belongs to the family of epicyclic gears. Appendix D contains the alternatives that were explored for the actuation of the θ-arm joint.

Joint design

Figure 4.2 show a cross section of the upper arm. As can be seen the θ joint splits the arm in two section, the shoulder section (1) and the elbow section (2). These sections are connected to each other by a crossed roller bearing (FRB CRA 6008) (3). The type of bearing is the same as in the upper leg[2] and was chosen over the alternative of using two axial needle bearing and a radial needle bearing due to space constraints. The use of axial needle bearings severely limits the space available to the actuation due to the small inner diameter of these bearings.

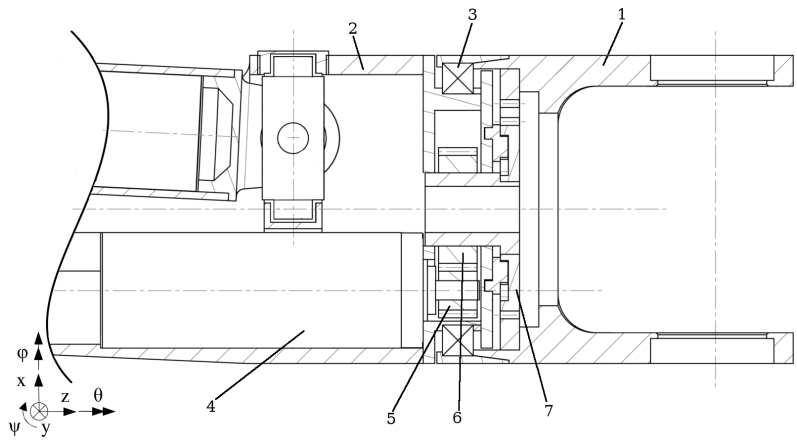

Figure 4.2: Section view of the θ-arm joint, shoulder section (1), elbow section (2), crossed roller bearing (3), DC motor (4), pinion (5), gear (6), hypocyclic gearbox (7).

Joint actuation

The joint actuation is driven by a 60 Watt motor (Maxon RE30) (4) the same as is used for the ϕ-shoulder actuation. The output shaft of the motor is connected to a pinion, m=0.5 and z=24 (5) which meshes with a gear, z=60 (6). The gear drives the input shaft of the hypocyclic gearbox (7).

Hypocyclic gearing allows high transmission ratios using only two gears. Figure 4.3 illustrates the concept: a pinion gear meshes with a internal ring gear. The pinion gear is rotated inside the internal gear with an eccentricity e, due to this movement the pinion gear rotates in the opposite direction. The ratio of such a transmission is given by:

$$i = \frac{Z_g - Z_p}{Z_p} \tag{4.1}$$

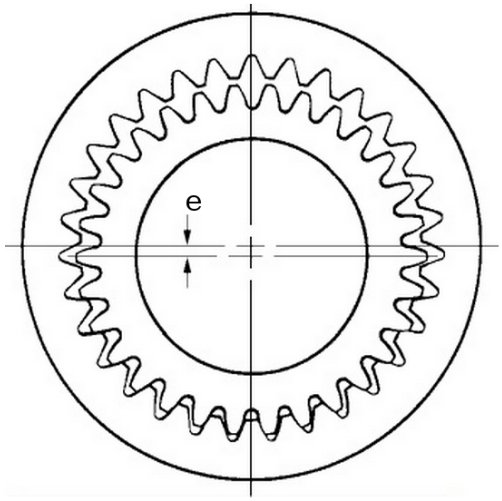

Figure 4.3: Hypocyclic gears with a small difference in the number of teeth 1 and eccentricity e

As can be seen a small difference between the gears in the number of teeth results in high transmission ratios, however the gears need special tooth geometry in order to avoid interference. To avoid interference the transmission ratio of the gearbox used in the design is kept low at i=1/10. Figure 4.4 shows the internal components of the gearbox used in the upper arm.

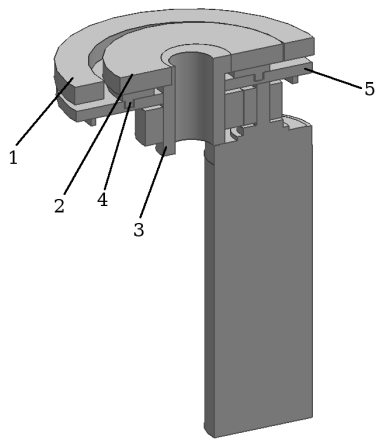

Figure 4.4: Hypocyclic gearbox, internal ring gear (1), pinion gear (2), eccentric shaft (3) intermediate plate Oldham coupling (4), bottom plate Oldham coupling (5).

The internal gear m=1 and z=55 (1) meshes with a pinion, z=50 (2). The pinion gear is driven by a shaft (3) with eccentricity $e = 2.5$ mm. The pinion gear is kept from rotating by an Oldham coupling (4) and (5) which fixes the θ DOF of the gear relative to the lower part of the arm while leaving it free to move in the x & y directions. By fixing the pinion gear in θ the ring gear can be used as the output of the gearbox which now rotates relative to the bottom plate (5) of the Oldham coupling according to equation 4.1.

Since a hypocyclic gearbox contains a number of translating bodies, it will introduce vibrations in the upper arm, by keeping these components lightweight this behaviour can be reduced somewhat. A balance weight is added to the shaft to counteract these vibrations.

Torques and transmission ratios

The primary transmission ratio is $i = 1/2.5$, combined with the gearbox this gives a total transmission ratio of $i = 1/25$. The DC motor is the same as the one used in the ϕ shoulder actuation and has a nominal torque of 85 mNm and a stall torque of 1 Nm. Efficiency of the actuation is estimated at 90%. This results in a maximum joint torque of 23 Nm and a nominal torque of 1.9 Nm.

Tooth loads and stresses

Due to the small difference in the number of teeth between the internal ring gear and the pinion a large number of teeth are in contact. This is in sharp contrast with conventional gearing where only one teeth per gear makes contact at any given moment. Due to the large number of teeth in contact the tooth load is relatively low. This allows the use of a plastic as the gear material lowering the mass of the actuation.

The Oldham coupling dogs can be considered as a cantilever beam with a uniformly distributed force. The maximum stress that occurs in such a situation is given by the following equation [3]:

$$\sigma = \frac{3F_r h}{lb^3} \tag{4.2}$$

Here F_r is the force acting on the Oldham coupling, h is the height of the dogs, b is the width of the protrusions and l is the total length of the protrusions. Acetal is an ideal material for the pinion gear and the Oldham coupling due to its low weight, high strength and low coefficient of friction. Using this material the dimension of the Oldham coupling can be obtained such that it will withstand the stress determined by equation 4.2. The dimension are $h = 3$ mm, $b = 6$ mm and $l = 28$ mm.

Actuation stiffness

The gears in the gearbox provide for a stiff transmission, however the stiffness of the Oldham coupling should be determined using FEM to ensure that it provides enough stiffness. If this is not the case, the Oldham coupling could be manufactured using aluminium parts at critical places such as the protrusions.

Backlash

The backlash at the Oldham coupling can be as low as 5 μm, this would result in a backlash of 0.07 mm at the hand. Backlash at the gear at the input shaft of the gearbox is $0.04°$ which is reduced by the gearbox to $0.004°$ which results in 0.03 mm backlash at the hand and a total backlash of 0.10 mm.

4.3 Arm ψ

The ψ-arm joint connects the upper arm to the lower arm, it has a ROM of $135°$ and must be able to generate significant amounts of torque. A ball screw drive is used for the actuation of the ψ-arm joint, other concepts that were considered can be found in Appendix A.

Joint design

Figure 4.5 shows a cross-section of the lower part of the upper arm. The upper arm (1) has two ears in which holes are made in line. Two single row ball bearings (INA FAG 61804-2RSR) (2) are placed in these holes connecting the upper arm to the lower arm (3). Distance rings (4) are used to facilitate assembly and bushes (5) are screwed into the lower arm to fix the ball bearings.

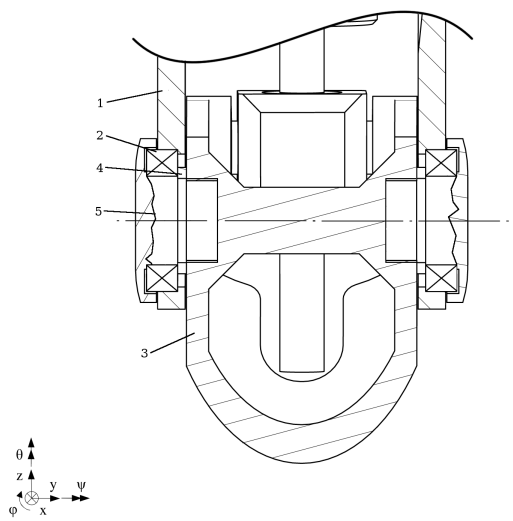

Figure 4.5: Cross-section of the lower part of the upper arm, elbow section of the upper arm (1), single row ball bearings (2), elbow section lower arm (3), distance rings (4), bushes (5)

Figure 4.6 shows the elbow section of the upper arm, as can be seen significant amounts of material have been removed from the tube in order to make room for the actuation and movement of the ψ-joint. This significantly weakens this section of the arm. Coupling of the two ears by the lower arms doubles the bending stiffness of the ears however the stiffness of this section should be optimized using FEM analysis.

Figure 4.6: Isometric view of the elbow section of the upper arm.

Joint actuation

The actuation is provided by a ball screw drive, figure 4.7 shows an cross-section of the elbow actuation, as can be seen the 60 Watt DC motor (Maxon RE30) (1) driving the actuation is located at the posterior of the arm. This is because placing the motor and actuation at the front of the arm would limit the achievable ROM.

The output shaft of the DC motor is connected to a flange (2) which is supported by two axial needle bearings (INA FAG AXK1528) (3). These bearings are needed to divert the axial force in the ball screw away from the motor, which is not designed to cope with this force. The flange is connected to a ball screw (4) with a diameter of 10 mm and a lead of 3 mm. The ball screw nut (5) is screwed into an elastic hinge (6), which connects to the lower arm (7) through two singe row ball bearings (INA FAG 61800-2RSR) (8). The rear side of the motor it is supported by an universal joint consisting of a intermediate body (9), single row ball bearings (8) and plain bearings (10).

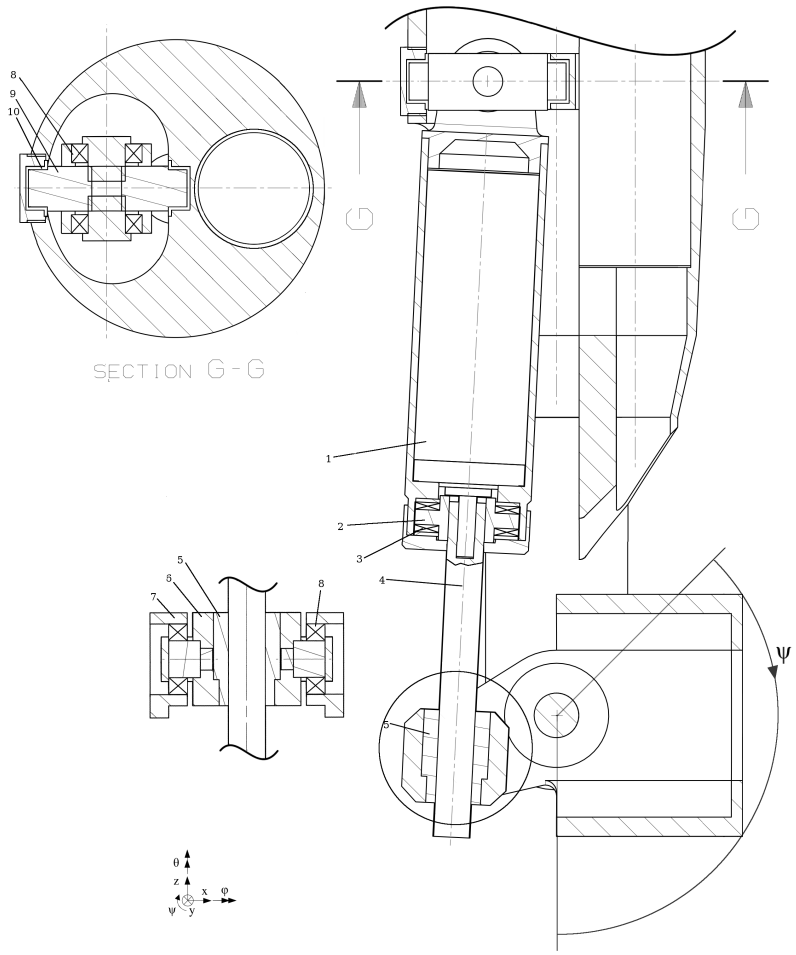

Figure 4.7: Cross section view of the ψ actuation, DC motor (1), flange (2), axial needle bearings (3), ball screw spindle (4), ball screw nut (5), elastic hinge (6), lower arm (7), single row ball bearings (8), intermediate body (9), plain bearings (10)

In the plane of rotation, the motor ball screw combination is supported at both sides with ball bearings, these are needed allow it to swing freely while the lower arm travels through its ROM. An elastic hinge and plain bearings are used to allow for fitting tolerances. The elastic hinge is the same component as used in the knee actuation[2]. It is needed to avoid overconstraining the spindle motor combination. Using the same component for both the knee and the elbow actuation helps keeping spare parts and manufacturing costs low.

Torques and transmission ratios

With a ball screw drive in this configuration the transmission ratio is dependent on the position of the elbow ψ, the efficiency of the actuation is estimate at 90% which leads to a torque curve as shown in figure 4.8.

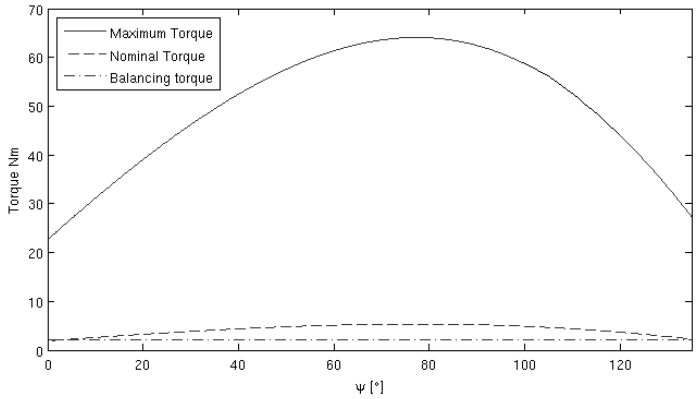

Figure 4.8: Torque of the elbow joint, dependent on ψ

The maximum torque available is 65 Nm and the nominal torque lies between 1.3 and 5.3 Nm. The maximum amount of torque needed to balance the lower arm is 2.2 Nm. As can be seen this can be done with the nominal torque through nearly the entire ROM of the lower arm. Available torque is high when the elbow is at an angle of about 90 ° with respect to the upper arm, this is a considerable advantage since this is the position of the joint for which the highest torque demand is expected.

Actuation stiffness

Actuation stiffness is dependent on the position of the joint, spindle stiffness is given by the following equation:

$$c = \frac{\pi d^2 E}{4L} \tag{4.3}$$

The stiffness of the nut is estimate at $1 \cdot 10^8\ N/m$. This gives an rotational stiffness by $k = c/i^2$, which is displayed in figure 4.9.

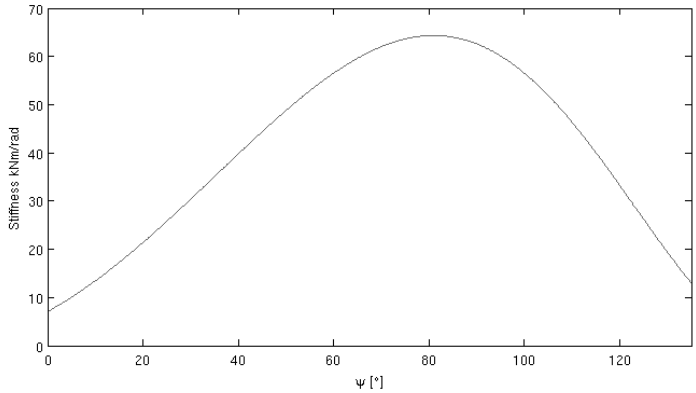

Figure 4.9: Rotational stiffness of the elbow joint, dependent on ψ

Buckling

Due to the posterior placement of the ball screw spindle it is usually under compression when loaded. This is a disadvantage since buckling may occurs, however posterior placement of the spindle does not obstruct the ROM as is the case of anterior placement. The load under which buckling occurs is given below [3]:

$$P_c = \frac{\pi^2 EI}{L^2} \tag{4.4}$$

The length L of the spindle that is under compression depends on the position of the joint and is thus dependent on the joint position. Figure 4.10 shows a graph of the buckling load as a function of joint position ψ.

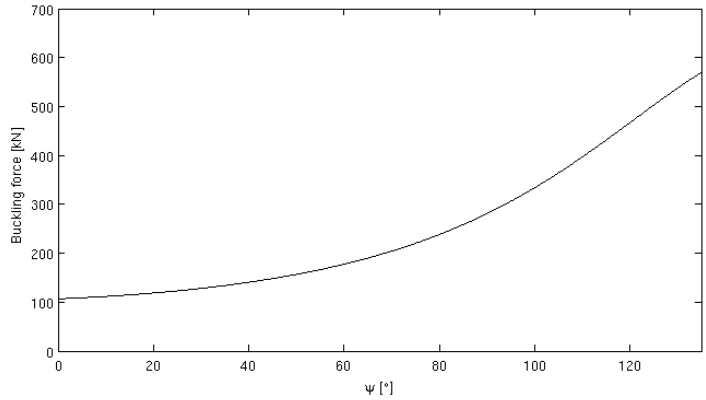

Figure 4.10: Buckling load of the ball screw spindle, dependent on ψ

The theoretical buckling load lies between 100 and 600 kN, which is a force far greater than the tensile force the ball screw spindle can withstand $\approx 30kN$, this is because the slenderness factor of the spindle LA/I is low. As a result the spindle will not fail due to buckling.

Backlash

Ball screw drives can be made backlash free through the use of a lead with a non-circular cross-section. This allows the elbow joint to be actuated without backlash.

4.4 General Remarks

Since the arms are designed symmetrically, the left and right arm are exchangeable and the number of unique parts is kept low. This also decreases the amount of spare parts needed.
The design uses the same INA FAG 61800-2RSR and INA FAG 61804-2RSR bearings as the shoulder joint. The axial needle bearings are also the same as those used in the shoulder and the lower body.

The upper arm has an estimated mass of 1.4 kg, comparable to the weight of 1.35 kg of a scaled down human upper arm. Most of the parts can be made from aluminium, the spur gear and Oldham coupling in the hypocyclic gearbox can be made out of acetal (Mädler offers gears made of acetal in the size needed) in order to reduce weight.

As with the shoulder joint in the case of overloading the actuation, it is important that they fail in such a way that it is cheap and easy to repair. In the case of the hypocyclic gearbox the connection of the internal ring gear and the shoulder section of the upper arm should fail. For the elbow a failure mechanism can be placed between the lower arm and the lever connected to the ball screw drive nut.

5 Lower Arm

The lower arm of a human contains three DOFs, ϕ-wrist, ψ-wrist and θ-wrist. Of these three DOFs two are situated in the wrist itself and the θ joint lies near the elbow, figure 5.1.

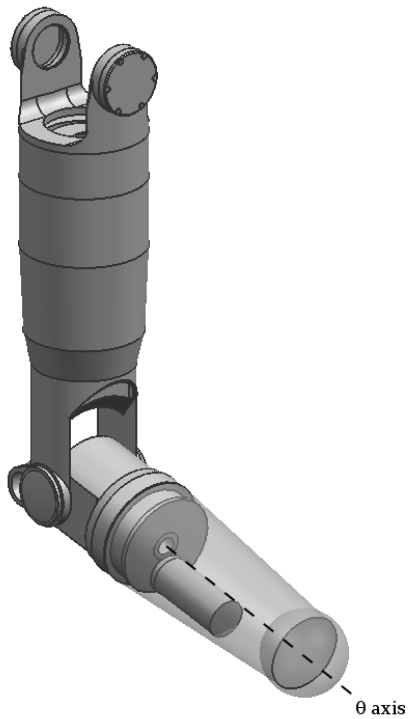

Figure 5.1: Isometric view of the upper and lower arm.

5.1 Arm θ

Figure 5.2 shows the θ-wrist joint and the joint actuation, like the θ actuation of the upper arm it combines a hypocyclic gearbox (1) with spur gears (2) to achieve the desired transmission ratio. The two actuation share a large number of parts, for instance all of the gears and a number of the components of the Oldham coupling are identical. The transmission ratio is the same at $i = 1/25$. Resulting torques are lower due to the use of a smaller more lightweight 20 Watt DC motor (Maxon RE25) (3). Nominal torque is 0.76 Nm

and stall torque is 8.1 Nm. A crossed roller bearing (FRB CRA 5008) (4) is used to connect the two sections of the lower arm.

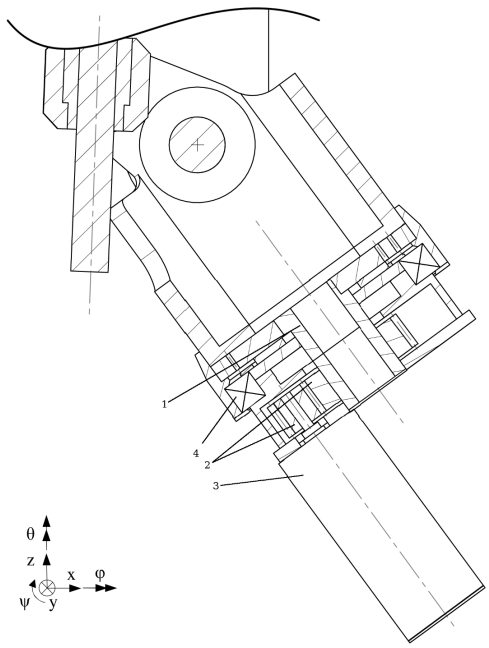

Figure 5.2: Cross section of part of the lower arm including the θ-wrist joint, hypocyclic gearbox (1), spur gears (2), DC Motor (3), Crossed Roller Bearing (4).

5.2 Wrist & Hand

As can be seen in figure 5.1 the design as of now does not include a wrist or hand. Since the robot's primary function is to research humanoid walking simple dummy hands are sufficient for stabilization. However in order for the robot to be a full anthropomorphic humanoid it requires a fully actuated human like hand and wrist, The wrist contains two DOFs, the human hand has a total of 20 DOFs. The design of the θ wrist joint leaves space in the lower arm for the actuation of the joints.

A solution in between a dummy hand and a fully actuated human like hand would be a two or three pronged robotic claw. These are commercially available or can be specifically designed for the robot.

6 Torso

The lower part of the torso is designed by Maarten Dekker[2], the upper torso still needs to be designed. The upper body combines a number of functions:

- The housing and protection of the batteries and electronics,
- coupling of the arms to the lower body,
- coupling of the neck and head to the lower body.

Designing the torso is such a way that not only the sides of the torso can be opened easily for maintenance on the electronics but also that the shoulders and neck are attached in a modular fashion would greatly facilitate maintenance of the robot.

The mass of the torso is 15 kg, this includes 3.6 kg of the shoulders and 2.9 kg of the lower body, the leaves 8.5 kg for this torso including electronics. Figure 6.1 show a mock-up of the robot, containing the lower body (designed by Maarten Dekker), the arms and a mock-up of the torso, hands and head. The last three of these still need to be designed.

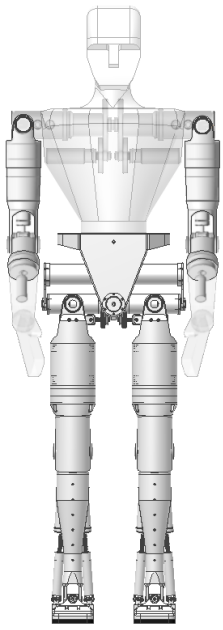

Figure 6.1: Mock-up of the robot.

The location of the shoulder joints and actuators in the torso is visible in this figure. As can be seen space is left in the abdomen of the robot, more available space lies behind the DC motors driving the shoulder joints. Batteries should be placed near the bottom of the torso so that the robots COM will lie in its abdomen. As noted in the report of Maarten Dekker all PCBs should be placed vertically in the torso to make maximum use of passive cooling through convection of the air.

7 Conclusion and recommendations

7.1 Conclusion

The goal of this project was to give a concept design for the arm of the new humanoid robot. The arm is designed to be similar to a human arm. Dimensions and masses were obtained from scaling down a 1.8 m tall human to 1.5 m. Table 5 gives an overview of the joint ROMs and torques.

Joint	Achieved ROM [°]	Human ROM [°]	Nominal Torque [Nm]	Stall Torque [Nm]
Shoulder ψ	210	230	5.6	71
Shoulder ϕ	180	170	1.6	19
Arm θ	180	180	1.9	23
Arm ψ	135	155	1.3*	65*
Wrist θ	180	180	0.76	8.1

Table 5: Overview of the ROM and Torques of the different joints, *joint torque is position dependent minimal nominal torque and maximum stall torque are given.

As can be seen in the table the robot has comparable ROM to that of an human. Joint torques are adequate for freely moving the arm while supporting a load of up to 0.7 kg. This load can be supported using the nominal motor torque which leaves the stall torques available for accelerating the arm. The maximum load that can be supported continually is 3 kg in each arm, this is done by minimizing the joint torques through optimal positioning of the limbs with respect to the load.

The design of the arm does not include a wrist and hand, these need to be either designed or purchased. The mass of the arm segments is kept low, comparable to that of a human: 1.6 kg per shoulder, 1.4 kg for the upper arm and 0.4 kg used in the lower arm. All actuations have low backlash or no backlash this allows the use of forward kinematics to predict the position of the arms.

7.2 Recommendations

The design of the arm needs to be finalized for fabrication. Also FEM can be used to optimize the stiffness of parts while keeping the mass low. A part that would benefit significantly from lateral stiffening is the elbow section of the arm.

In order to complete the robot a torso and head neck combination needs to be designed. Chapter 6 of this report touches briefly upon the subject of the torso. Further recommendations on the torso can be found in the report of Maarten Dekker.

References

[1] Boston gear, www.bostongear.com

[2] Dekker, M.P.H., *'Mechanical design of a humanoid robot's lower body - Improved walking and posture dynamics'*. The Netherlands: Eindhoven. Eindhoven University of Technology, Mechanical Engineering. 2010.

[3] Fenner, Roger T., *'Mechanics of Solids'* Great Brittain: London. CRC Press LLC. 1999..

[4] FRB bearings, http://www.frb-bearings.com/

[5] Maxon, www.maxonmotor.com

[6] Mädler, www.maedler.de

[7] Rosielle, P.C.J.N., *'Lecture notes 4007: Constructieprincipes - voor het nauwkeurig bewegen en positioneren'*. (in Dutch), Eindhoven University of Technology, 2008.

[8] Schaeffler, FAG, www.fag.com

8 Appendix A: Anthropometry

This Appendix is taken from Dekker, M.P.H.[2]

8.1 Link Dimensions

The human skeleton can be taken as an example for the link dimensions of a humanoid robot. In Figure 8.1 the key dimensions of the human skeleton are illustrated.

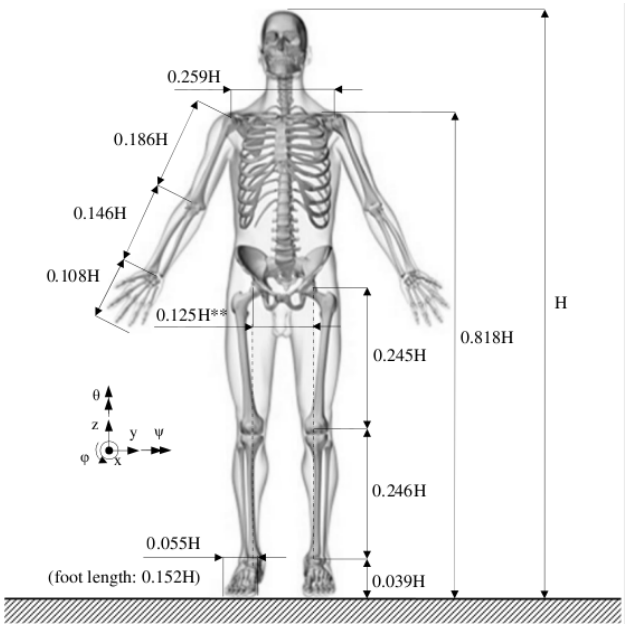

Figure 8.1: Major body segment lengths of the human body, expressed as a fraction of total length H.

8.2 Mass distribution

To obtain a similar dynamical response to movements as a human, a robot should have a similar body mass distribution. This distribution is given in the folowing table.

body segment	mass fraction [%]
head and neck	8
torso	33
upper arm	3
lower arm	2
hand	1
arm	6
upper body	53
waist	13
upper leg	10
lower leg	5
foot	2
leg	17
lower body	47

Table 6: Mass distribution of human beings, expressed as a fraction of total mass.

9 Appendix B: Elbow ψ actuation concepts

In this section 5 concepts for the actuation of the elbow joint are mentioned. Figure 9.1 show these concepts:

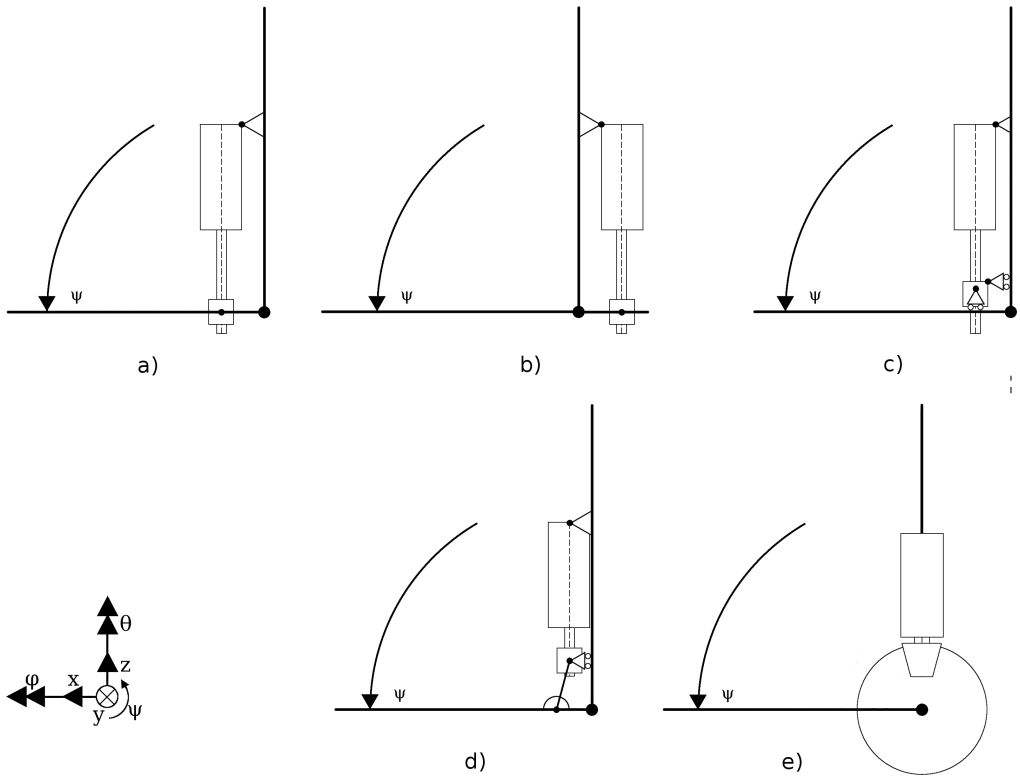

Figure 9.1: Actuation concepts: (a) direct anterior ball screw actuation consisting of a motor, spindle and nut, (b) posterior direct ball screw actuation consisting of the same elements. (c) & (d) indirect ball screw actuation (c) using two linear guides and (d) using a linear guide and an intermediate body, (e) using a planetary gearbox and bevel gears.

This section will continue with a brief description of the merits of each configuration, a comparison of the different concepts and argumentation for the final choice.

9.1 Direct Ball screw

9.1.1 Anterior Direct Ball screw

This concept (a) as well as the following three uses a ball screw to transform the rotary motion of the DC motor into a linear one which drives the joint. Use of a ball screw spindle is ideal in the this configuration since it allow for a large reduction in a small volume. Because of the direction of the majority of the forces this configuration a ball screw located in front of the joint introduces mainly tensile forces in the spindle.

9.1.2 Posterior Direct Ball screw

This concept (b) functions identical to the anterior direct ball screw drive, however by placing the motor and spindle behind the joint it is less restrictive on the joints motion thus permitting a larger ROM, however the forces acting on the spindle are now compressive rather than tensile. For both these cases increasing the length between the pivots decreases the swing of the motor spindle combination while decreasing the stiffness.

9.2 Indirect Ball Screw

9.2.1 Indirect Ball Screw with Linear Guides

The following two concepts, (c) and (d) fix the spindle in five DOFs in order to linearise the transmission ratio form spindle to arm. Using a linear guide or a push pull rod makes this linearisation possible however this also introduces forces which act perpendicular to the spindle requiring it to be supported by a second linear guide. For both these concepts the anterior configuration is shown.

9.3 Concentric Reductions

9.3.1 Planetary Gear and Bevel Gears

The last concept (e) uses a planetary gearbox in combination with a bevel gear to transmit the motor torque to the lower arm. Planetary gearboxes combine high stiffness with a compact transmission while the bevel gears are used as a final reduction. A drawback of this concept is the backlash in the planetary gearbox and between the bevel gears.

9.3.2 Harmonic Drive

The harmonic drive is given special mention here as it can supply high torque to actuate the joint while being very compact. However the costs of such a transmission are far higher than those of the other concepts and is thus too expensive to be used in this design.

9.4 Comparison of the Concepts

9.4.1 Ratios and Torques

The transmission ratio of the various concepts can be seen in figure 9.2. As can be seen the transmission ratio of the direct and indirect ball screw drive depends on the position of the joints due to shortening of the moment arm in the extreme positions of the elbow joint. The transmission ratio of the planetary gearbox is also visible in figure 9.2, as can be seen the transmission ratio is constant with respect to the joint position.

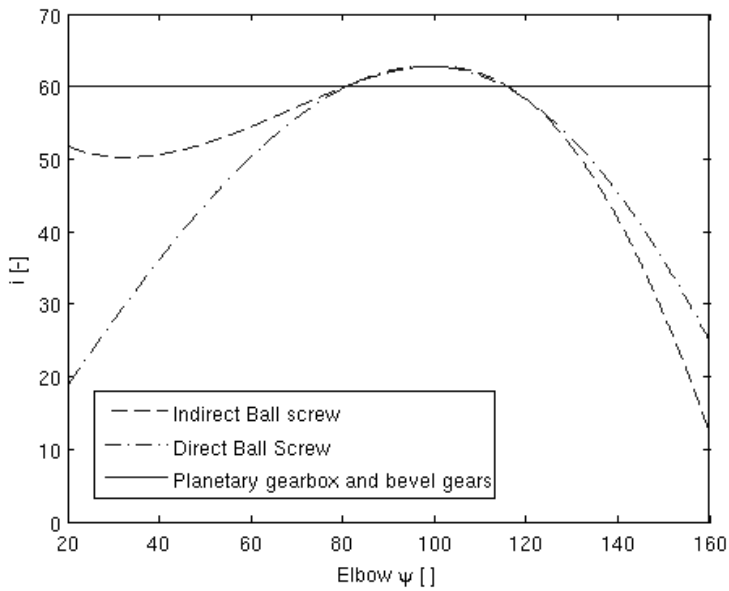

Figure 9.2: Transmission ratio as a function of ψ

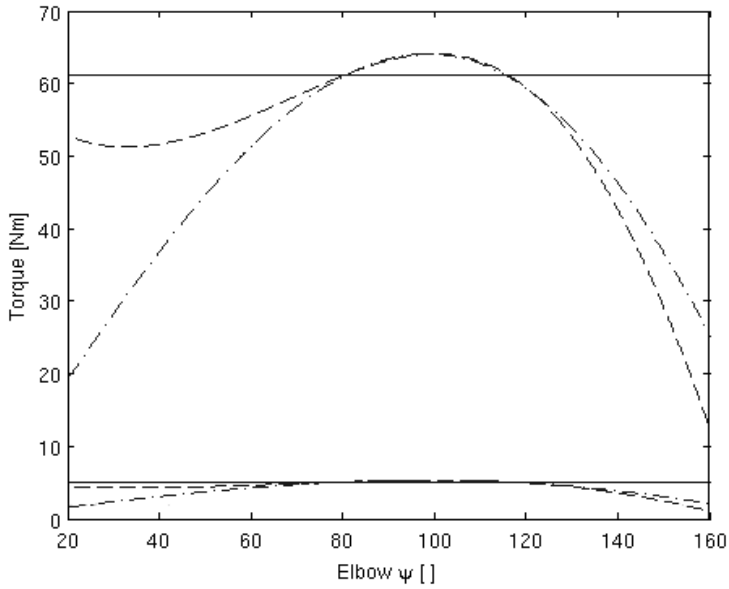

Figure 9.3: Nominal and Stall torques as a function of ψ

Figure 9.3 displays the joint torques for the different actuation concepts. As can be seen all concepts deliver the needed 2 Nm needed to support the lower arm within the nominal operating range of the DC motor. Due to the ψ dependent ratio both ball screw concepts have lower torque at extreme joint positions, since the expected needed torque in these positions is low because of a short arm perpendicular to the load in these positions this is not a problem.

9.4.2 Actuation Stiffness

The stiffness of a planetary gearbox combined with a bevel gear is high compared to the stiffness of a ball screw actuation. The stiffness of a ball screw actuation depends on the position of the joint. For the direct ball screw actuation the stiffness lies between 30 kNm/rad and 2 kNm/rad in the extreme positions. For the ball screw actuation with a push pull rod the stiffness lies between 26 kNm/rad and 1 kNm/rad when the joint is fully extended.

9.4.3 Efficiency

The efficiency of a direct ball screw drive in about 90 % and because of the negligible friction loss in the bearing the efficiency of the indirect ball screw

drive is about the same. The efficiency of a planetary gearbox is about 85 % and combined with a final reduction the total efficiency drops to about 80 %.

9.4.4 Backlash

The ball screw drives can be made backlash free. A planetary gearbox in combination with a final reduction using bevel gears has a backlash of about 0.3° which results in about 1.5 mm of backlash at the hand.

9.4.5 Complexity

The direct ball screw drive and the planetary gearbox are both relatively easy to implement. Both indirect ball screw concepts require many components including linear bearings to constrain the motor and to avoid force perpendicular to the spindle, this increases the complexity of these concepts.

9.4.6 Final choice

The posterior direct ball screw concept is chosen because it combines:

- efficient transmission,
- large ROM
- low backlash,
- low number of parts, low complexity

10 Appendix C: Shoulder ψ actuation concepts

The shoulder joint ψ actuation combines a large ROM (210°) with high output torque. Because of the large ROM it is not possible to actuate the joint by a direct ball screw actuation as is done with the elbow joint. This section contains the concepts that were evaluated for the ψ actuation.

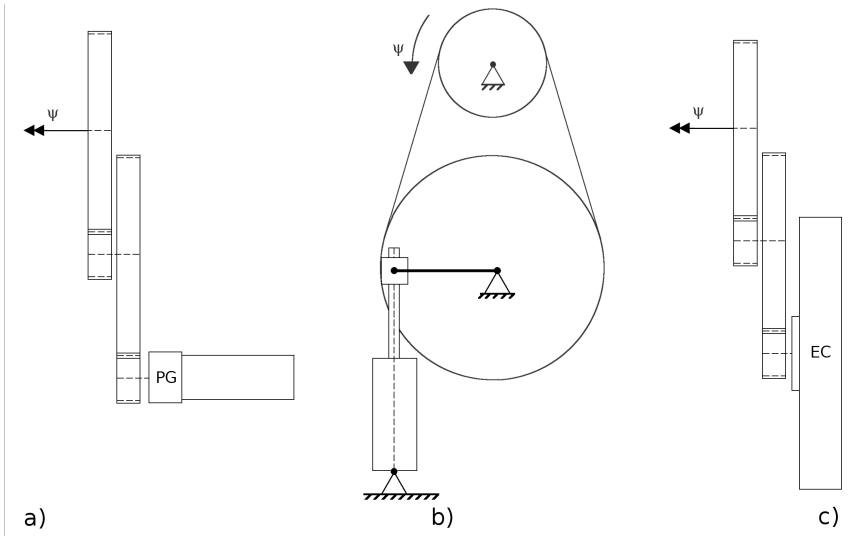

Figure 10.1: Actuation concepts: (a) DC motor, planetary gearbox and gear train, (b) indirect ball screw drive and belt drive, (c) EC pancake motor and gear train

10.1 Planetary gearbox and final drive

This concept (a) utilizes a planetary gearbox and DC motor to actuate the joint. The final reduction is a set of four gears. This secondary reduction is preferable over simply using a planetary gearbox with an extra stage since the secondary reduction reduces the backlash present in the gearbox as well placing the motor eccentric from the shoulder joint increasing the space available to actuation of the shoulder in ϕ. By placing the final reduction near the center of the body it is possible to use larger gears which reduces the tooth load of the gears.

10.2 Indirect ball screw

This concept (b) uses a ball screw spindle attached to the motor to provide the necessary reduction for the actuation. However since a ball screw can only actuate rotations of less than $180°$ a secondary transmission is needed with a ratio $i > 1$. To reduce the stroke of the ball screw a system of pulleys is used. Because the maximum thickness of the belt is dependent on the size of the pulleys, using large pulleys creates a stiffer transmission. The largest pulley is placed near the center of the torso in the frontal plane to make maximum use of the space available.

10.3 Pancake drive

The previous two concepts make use of the same maxon DC motors as used in the lower body and TUlip, this concept (c) uses a different maxon motor to actuate the joint. This motor is a flat brushless DC motor from the EC range. Since this motor has 4 times as much torque a reduction of $i = 20$ is needed. This reduction can be achieved using a two stage gear train as can be seen in the figure above.

10.4 Comparison of the concepts

10.4.1 Torque, Stiffness, Efficiency & Backlash

Table 7 displays the transmission ratio, stiffness, efficiency and backlash of the three concepts. All concepts can supply a nominal torque of 7.5 Nm.

Concepts:	Ratio [-]	Stiffness [kNm/rad]	Efficiency [-]	Backlash [°]
Planetary gearbox + gear	82	high	0.80	0.03
Indirect ball screw	82	4	0.90	0
EC motor + gears	20	high	0.90	0

Table 7: Transmission Ratio, stiffness, efficiency and backlash for the different concepts

From this table it becomes clear that using gears allows for the highest stiffness while both the concept with the EC motor and the Indirect ball screw drive can be made backlash free.

10.4.2 Complexity

The planetary gear box and gears is the simplest option to implement, The indirect ball screw drive includes more parts and requires more space for the pulleys, while the EC motor adds complexity to the electrical components such as the drivers and controllers as well as the software.

10.4.3 Final Choice

The final choice is for the concept using a planetary gearbox and a final reduction using gears, it offers a more compact actuation over the alternative of an indirect ball screw drive and pulleys, furthermore it is more stiff than the indirect ball screw drive concept. The pancake drive concept was dropped due to the increased complexity of controlling such a drive as well the added complexity of the electrical components needed.

11 Appendix D: Arm θ actuation concepts

The actuation of the arm in θ is located in the upper arm. As such it consists of a transmission between parallel axes. The reduction needed to drive the arm is about $i = 30$. Four concepts where taken into consideration these are shown in the following figure.

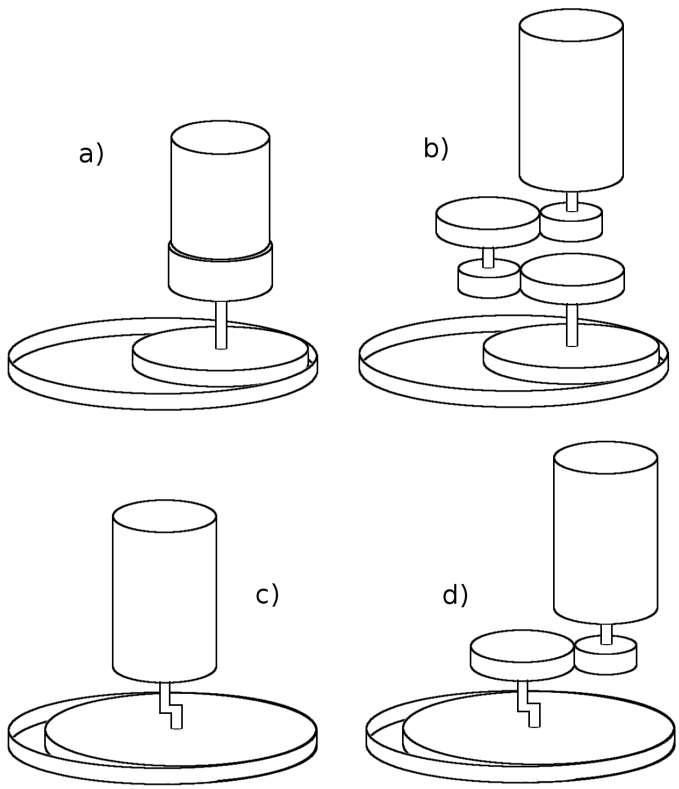

Figure 11.1: Actuation concepts: (a) DC motor, planetary gearbox pinion and internal gear, (b) DC motor, gear train and internal gear, (c) DC motor and hypocyclic gearbox, (d) DC motor, spur gears and hypocyclic gearbox

All these concepts include a gear with internal teeth because it allows the largest gear given the available space. If the internal gear is driven conventionally using a pinion (concept (a) & (b)) this results in a reduction of approximately $i = 3$, this leaves a transmission ratio of 1/10 for the first stage. Using a maxon planetary gear (a) results in a backlash of $0.3°$, using a gear train instead the backlash can be reduced by pre-loading the gears, the large amount of gears however increases the complexity of the design significantly.

Concepts (c) and (d) make use of hypocyclic gearing which allows for a larger transmission ratio in a single stage, (c) consist of only a pinion and internal gear in this configuration and (d) uses an additional stage which places the motor eccentrically from the output axis, which is desirable.

11.1 Hypocyclic gears

Figure 11.2 illustrates the concept of hypocyclic gearing, an axle is driven by a motor, a pinion gear is positioned eccentrically on the axes and meshes with an internal gear. Turning the axle results in an circular motion of the pinion gear along the internal gear combined with a retrograde rotation of the pinion.

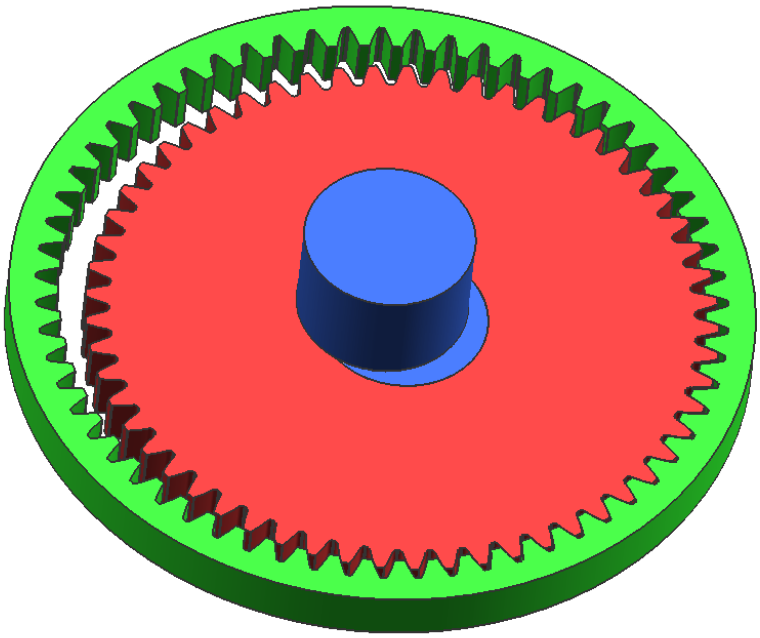

Figure 11.2: Hypocyclic gears with ratio i = 11.4, consisting of an eccentric drive shaft (blue), spur gear (red) and an internal gear (green).

The reduction is given by equation 3.1 where Z_g is the number of teeth of the internal gear and Z_p is the number of teeth of the spur gear. By using a small difference in number of teeth it is possible to achieve a large transmission ratio in a single stage.

$$i = \frac{Z_g - Z_p}{Z_p} \tag{11.1}$$

Using this principle instead of the conventional pinion and gear allows us to obtain the needed ratio in one stage, however this places the DC motor in the center of the upper arm obstructing the elbow actuation and would require gears designed for this specific application to avoid interference. Using an additional stage using two conventional gears allows us to position the motor eccentrically and reduce the transmission ratio needed from the hypocyclic gears significantly simplifying the design of the gears.

Another advantage of hypocyclic gears is the large number teeth that are simultaneously in contact which result in a higher permissible torque.

11.1.1 Final Choice

The concept using hypocyclic gears and second reduction is chosen because it offers a relatively simple design, has low backlash and has the motor placed at a convenient position.